Manufacturer

Litz Hitech Corp.
No.18, Yu 9 Road, Yu-Shih Industrial Park,
Tachia District, Taichung City, Taiwan
TEL: +886-4-26815711
FAX: +886-4-26815108
E-mail: sales@litzhitech.com
http://www.litzhitech.com

Litz Machine Tools (JiaXing) Corp.
No.1398 Hefeng Road, Jiaxing, Zhejiang
TEL: +86-573-82222735
FAX: +86-573-82222739
E-mail: sales.jl@litzhitech.com
http://www.litzchina.cn

Welcome to Litz website for more information

Dealer

2018.B

TV

CNC TAPPING CENTER

TV Series *(300/500/700)*

Tapping Center

Litz Hitech Corp. | Litz Machine Tools (JiaXing) Corp.

Content

Page

01 / 03 Cover Page, Content, Sub-system

Appearance, Structure

04 / 05 Appearance

06 / 07 Structure

08 / 09 Spindle Unit 12000/24000RPM

10 / 10 Transmission System

11 / 11 ATC System (16T and 21T)

12 / 13 Chip Removal System

14 / 15 High Performance Configuration

New Generation Controller

16 / 16 Controller System

Plant Layout

17 / 17 Production Management and Network

18 / 18 Oil Mist Cleaning

19 / 19 Shock Absorption and Load Bearing

20 / 20 Operability

Machine Precision

21 / 21 Measuring System

Specifications

22 / 22 Working Area

23 / 23 Automatic Pallet Changer

24 / 24 Automation

25 / 25 Machine Dimensions

26 / 27 Machine Sepecifications

Production Plant

Sub-system

ATC System

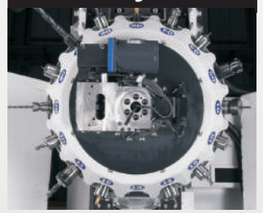

Control System

On-line Measurement System

Chip Removal

Structure I

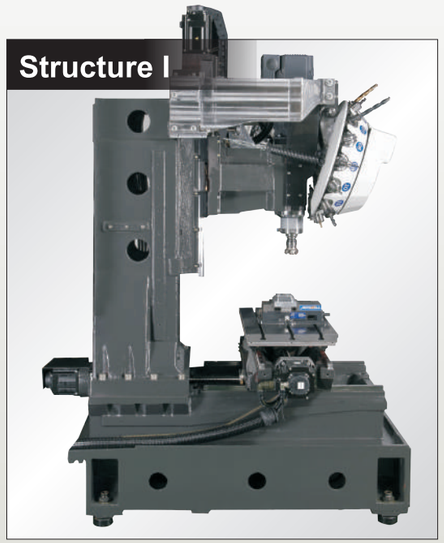

Direct Coupled Spindle

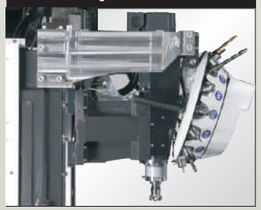

High-speed Spindle

Structure II

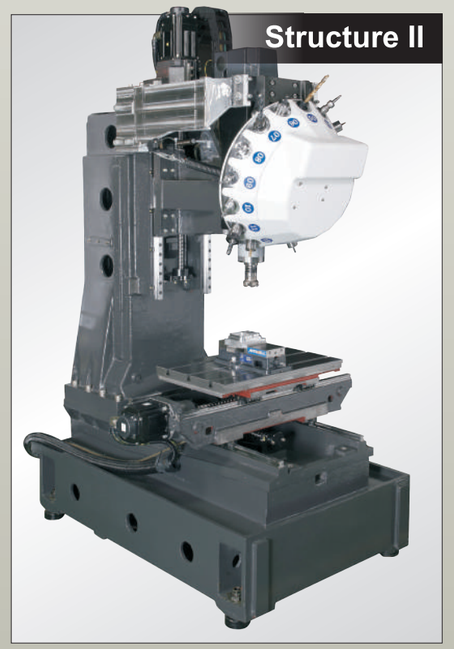

Spindle System

DDR Rotary

Process Application

Repair & Maintenance

Continuously Optimized Models

Speed = Cost. The second generation TV-series brings the value of the BT-30 Drilling Center to the new level, through improved the 3 axes ballscrews, and its transmission system. The refined spindle structure and its upgraded performance have optimized the chip removal system and tool changing mechanism. All these performance upgrades helped bringing the new generation of tapping center.

Pursuit of High Production Efficiency

The implementation of high-speed feeding and acceleration of spindle reduces its activation and idle time. Consequently, it improves spindle's overall efficiency. The tapping center also features a high-speed ATC mode and a new generation of controller system.

High-rigidity & High-precision Structural Design

- The major machine components are based on Meehanite cast iron, which is stable in material composition, ensuring machine's long-lasting structural quality.
- To provide high rigidity mechanism, Finite Element Analysis is used to calculate finest combination among cast iron components.
- Linear guide way is adopted on all three axes in order to withstand heavy loading and tolerate rapid movement, as well as ensuring precise positioning.

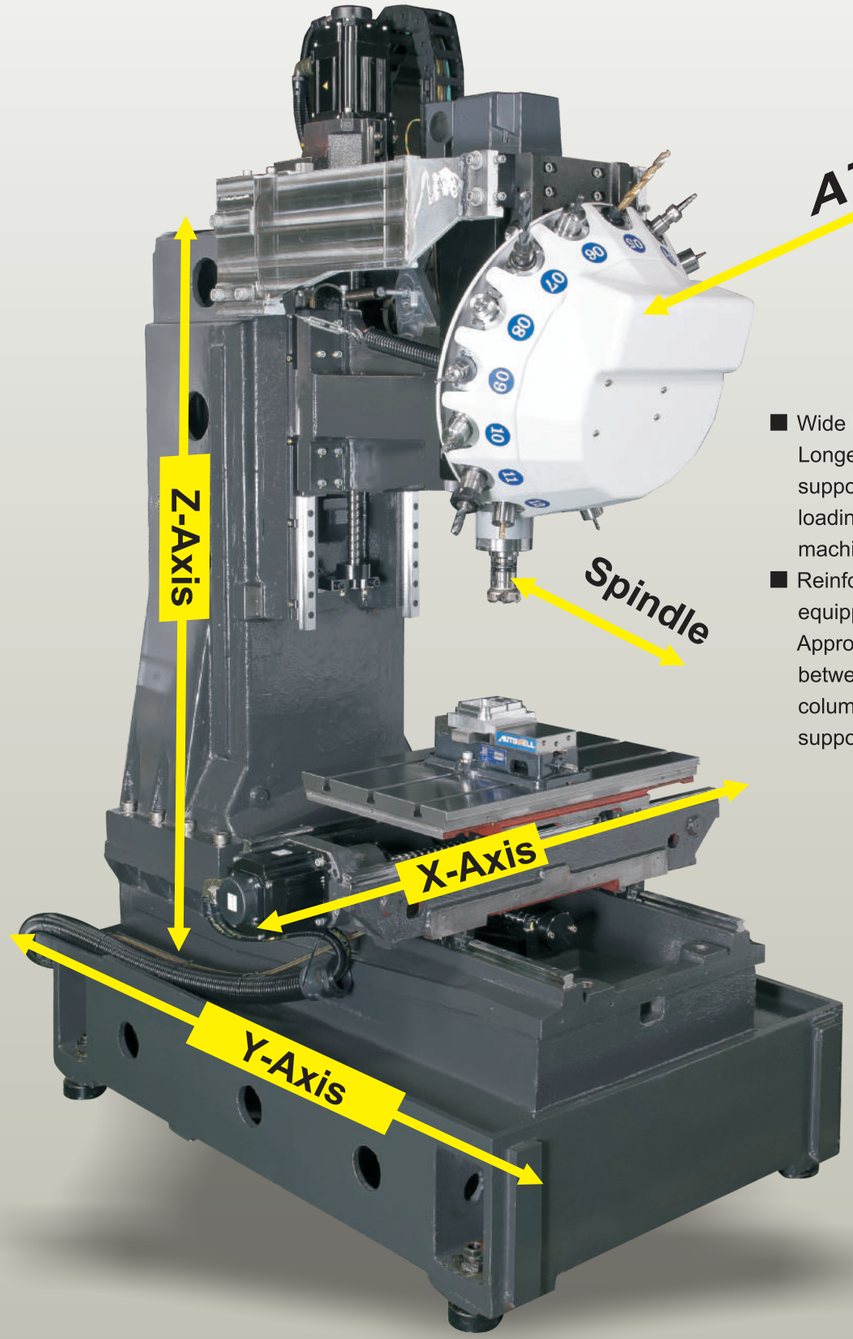

- Wide base, box-shaped column. Longer and wider saddle, full support design, assures heavy loading capabilities during machining.
- Reinforced rib structure is equipped in the spindle head. Appropriate contacting length between spindle head and column guarantees firm support for the spindle.

Structural Design of Base

Large-span Base Design

- The Large-span base effectively supports and evenly disperses the load force from the saddle. Short cantilever of saddle ensures excellent dynamic precision.
- Heavy-duty worktable.
- Effective support of the machining load.
- Steep-slope drain duct for prompt washout of the cutting chips, preventing chips from accumulating within the machine, improving chips removal efficiency and swift cutting fluid circulation.
- Back-inclined base design to accommodate large fluid tank as well as to accelerate chip removal process and to prevent chips accumulation within the machine.

Contacting Ratio Between Spindle Head & Column

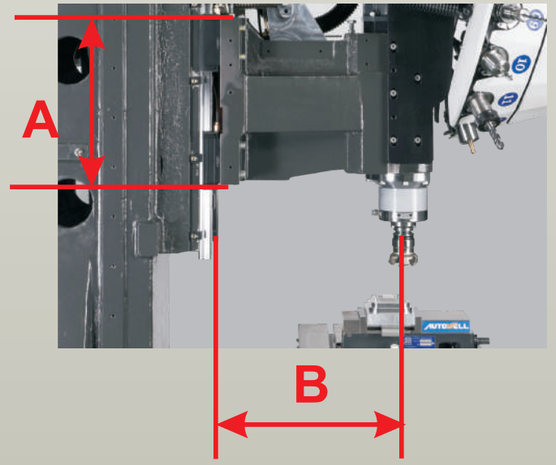

- Optimized design of contacting ratio between spindle head and column (A:B) provides spindle head & Spindle rigidity in heavy cutting load, as well as ensures geometric precision of spindle.

Optimal Chip Removal Angle

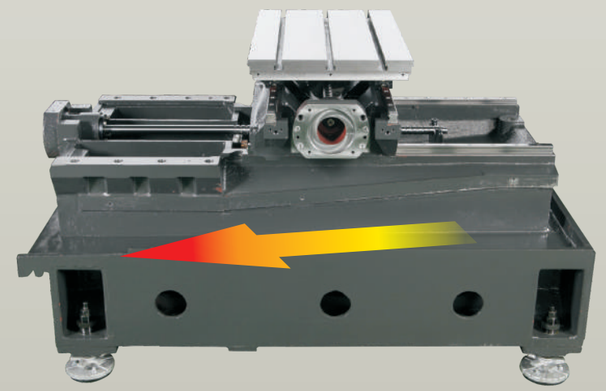

- Back-flow base design of chip removal angle provides ultimate chip removing capabilities, enabling smooth flow of chips into the storage cart.

Optimized Spindle Design

High-performance Spindle Unit

Low-Inertia Spindle Motor Characteristics (Mitsubishi)

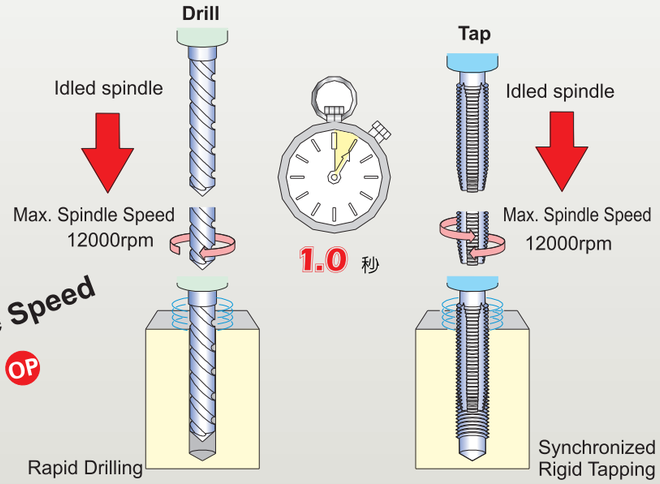

Spindle Direct Drive System

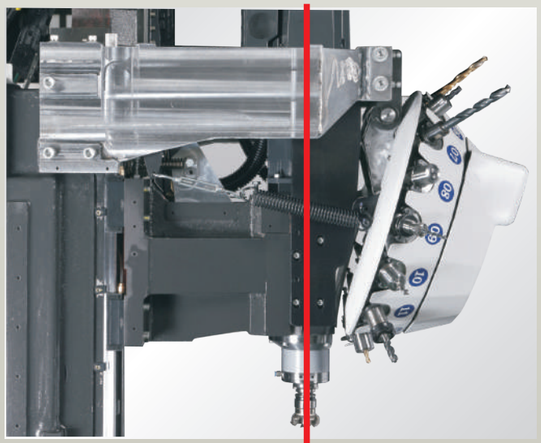

Spindle Coolant System OP

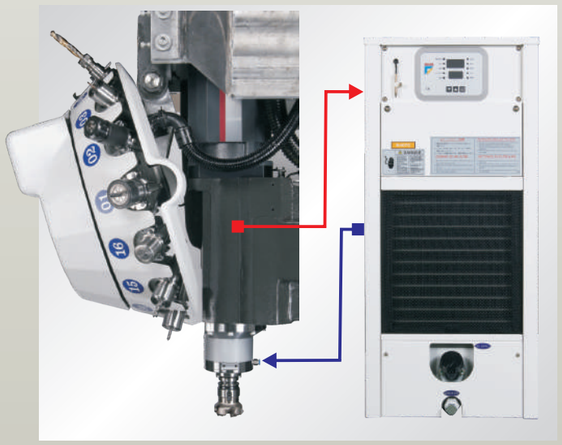

IDD – The Optimal Heat Isolation Design (Isolated Direct Drive System)

- The spindle operates without thermal effect from main motor. Thermal displacement is reduced, thus, the spindle precision and lifespan is guaranteed.
- Thermal isolation coupling is incorporated between the motor and the spindle. An optional feature of spindle oil coolant system will run the coolant throughout entire spindle unit.
- The spindle is directly coupled to the motor. No noise, backlash, or vibration problems.
- The transmission efficiency is extended from integration of direct coupling. The high quality rigid tapping can be achieved through rotation detection of the motor directly.

Tool Release Mechanism & Spindle Motor

Mechanical Tool-release Mechanism

- Enlarged bearing OD for high rigidity and to lower rolling pin rpm during the rotation.
- High-precision bearing translates into stable quality.

Optimal & Smooth Cam Curve

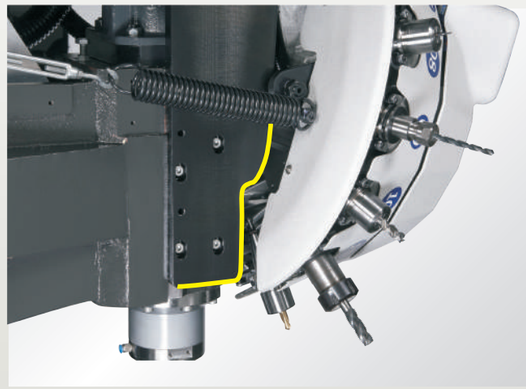

12000 RPM Spindle Power and Torque

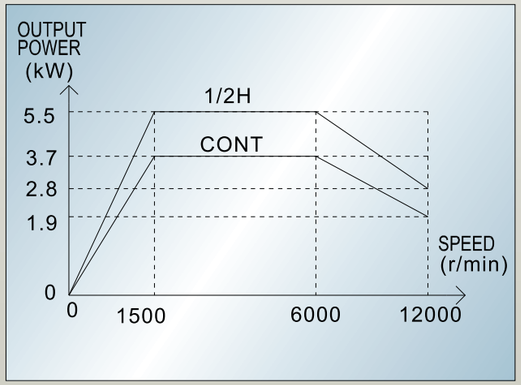

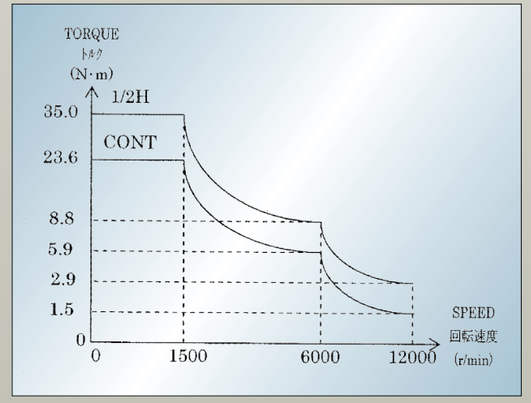

24000 RPM Spindle Power and Torque

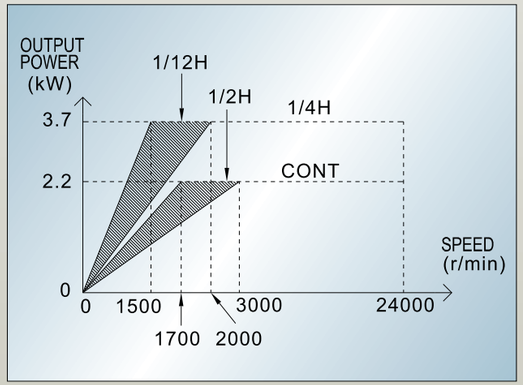

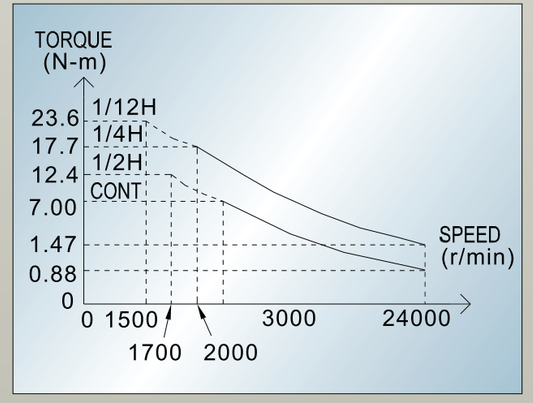

High-speed High-precision Drive System

- 3-axis direct drive motor fully eliminates backlash, achieves high-precision and provides stability during high-speed transmission.
- High-speed, high-precision linear guide way on all 3 axes ensures high acceleration and enhanced working efficiency and productivity.

High-speed High-precision Linear Guide Way

- Linear guide ways with zero backlash ensures consistent cutting surface on curve or slope cutting.
- Ideal for high speed travel and the drive power requirement can be minimized significantly.
- By using rolling contact instead of sliding contact, linear guide way reduces friction loss, reacts fast, and increases positioning accuracy.
- Load capacity is high on multiple directions. Multiple contact points are maintained when machining, cutting rigidity can be ensured.
- It is easy to assembly and interchange for lubrication system.
- Long lifespan can be achieved as a result of extreme low friction loss in the linear guide way.

Spindle Acceleration

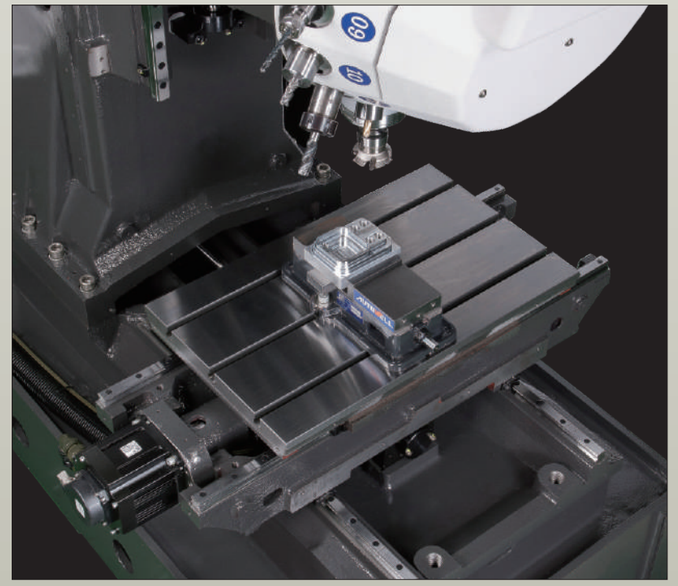

- High torque motor shortens axial positioning time (acceleration of all 3 axes >1G). It takes only 0.21s from idle to 60m/min.
- X/Y/Z-axis rapid travel speed 60/60/60 m/min., results in 30%-50% improvement in positioning time.

High-Speed ATC System & Magazine Unit

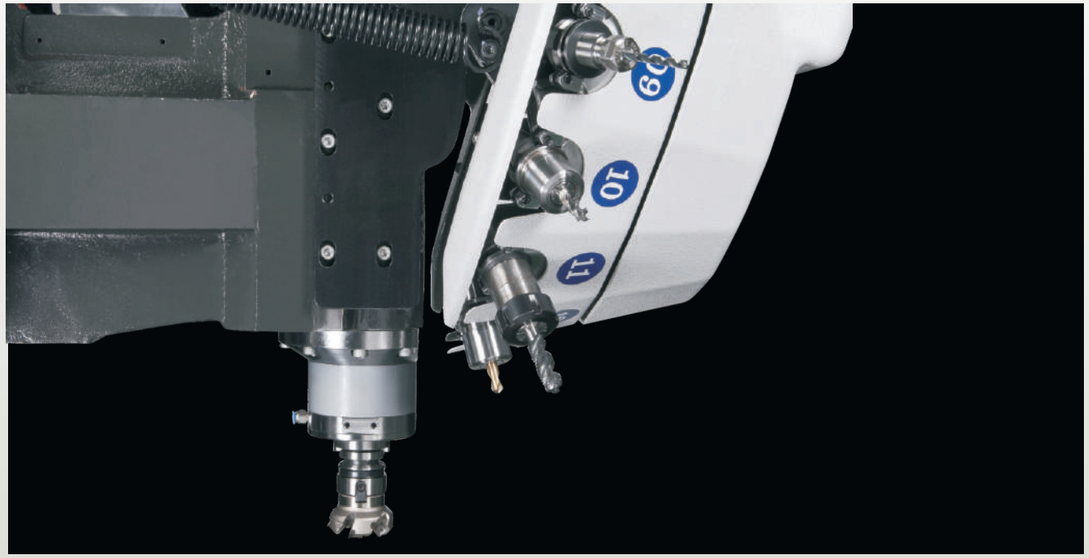

- Fast, simple, reliable and long-lasting lifespan tool changer system provides stable and reliable tool change operation.
- The unique tool change system adopts advanced cam drive device. Tool selection can be done rapidly by PLC program from any tool position.

Disc-type 16T Tool Changer

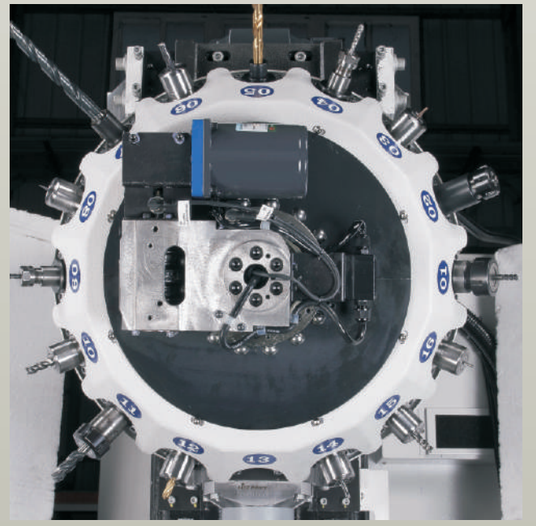

- Fully-loaded Tool Carriage: 25KG
- Sided-loaded Tool Carriage: 12KG

Disc-type 21T Tool Changer OP

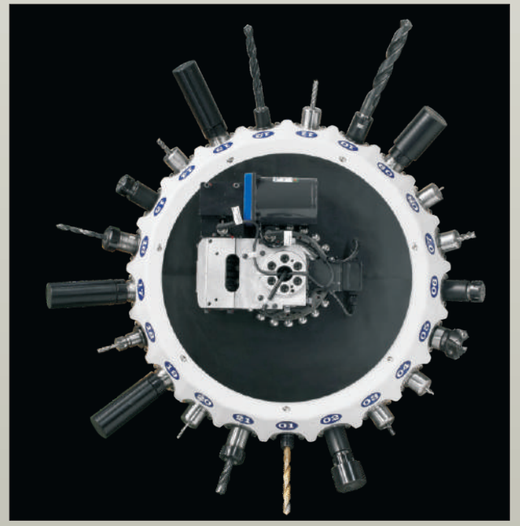

- Fully-loaded Tool Carriage: 35KG
- Sided-loaded Tool Carriage: 15KG

Highly-efficient Chip Removal Mechanism

Optimal Design of Operation Space

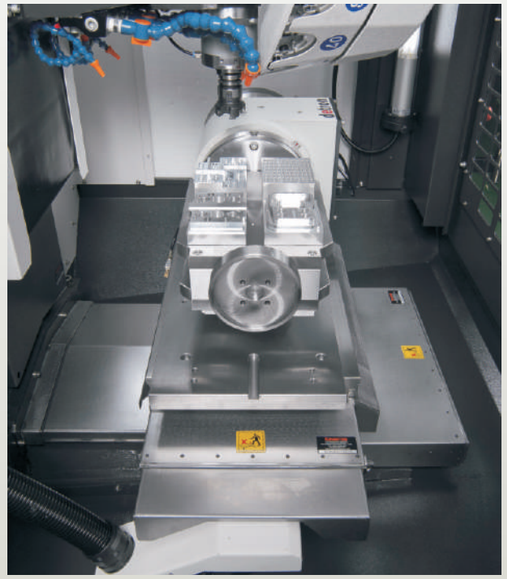

■ Optimal design of operation space enables easy collection and cleaning of cutting chips.

Optimal Chip Removal Flow

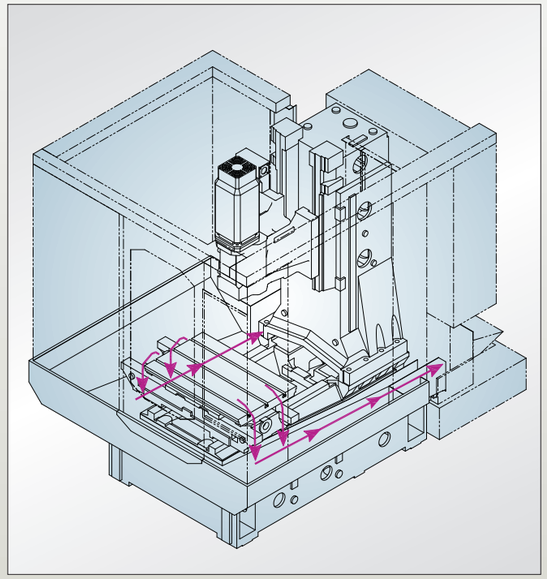

■ Back-flow base design of chip removal provides ultimate chip removing capabilities, enabling smooth flow of chips into the storage cart.

Z axis protection cover

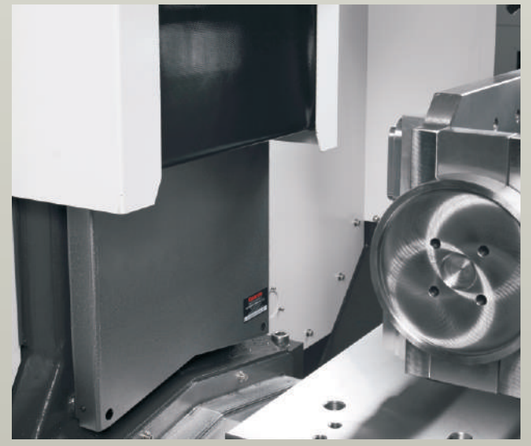

■ Unique design of Z axis protection cover offers effective protection against Z axis drive system, enabling Z axis to move fast and smoothly.

Y axis protection cover

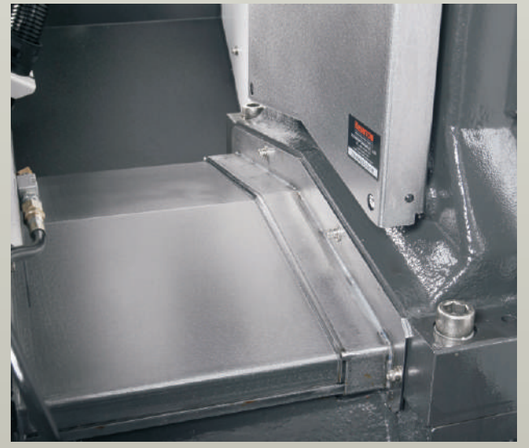

■ Full enclosure design of Y axis prevents chips from entering into the Y axis drive system, hence, system precision can be ensured.

CNC TAPPING CENTERS 12 LITZ HITECH CORP.

Internal Chip Removal System

High capacity Coolant Tank

■ High capacity coolant tank can store up to 200L, allowing effective transfer of cutting heat.

■ Drawer-type coolant tank design can slide inside the machine, saves space.

Top Wash down Device OP

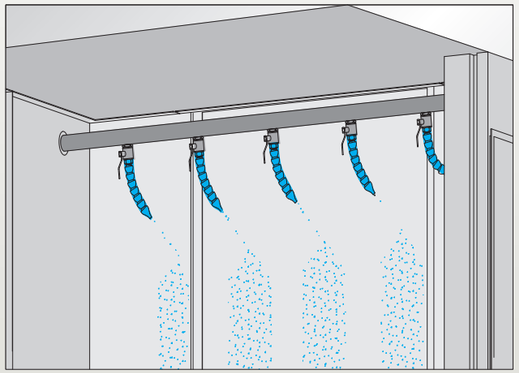

■ Washout device is provided internally on top of machine, providing enhanced expelling effect, freely washing out chips from prone-to-accumulate spots.

Chip Wash down System OP

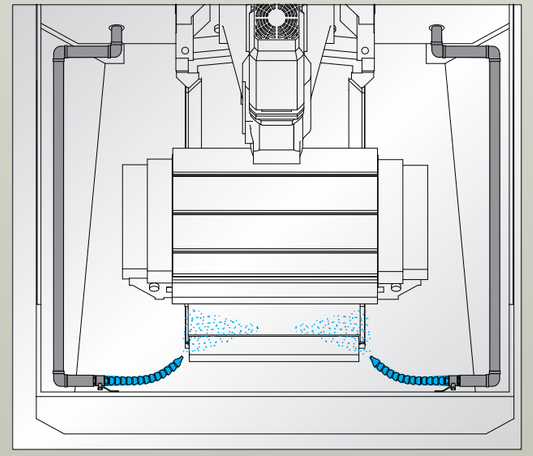

■ To achieve 24 hours continuous machining of light alloys, large capacity wash down device in combination along with large capacity coolant tank optimize chips removal and coolant circulation.

Fixture Cleaning Device OP

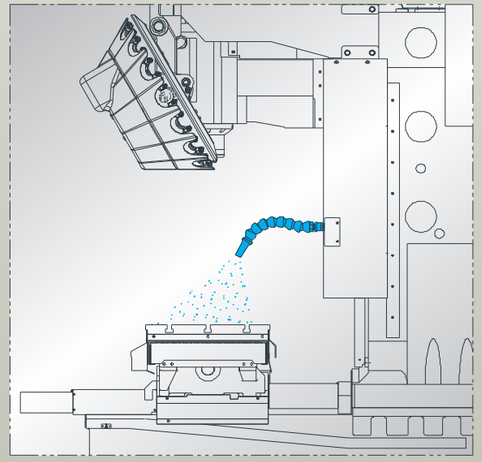

■ Machine is equipped with programmable fixture cleaning system for automatic wash down of chips from the fixture upon completion of machining.

High-performance layout I

4th Axis & Tailstock OP

■ 4th Axis offers special tailstock support design on to fixture, to maximize machining space.

Tool Length Measuring System OP

■ Automatic Tool Measurement System allows automatic input of tool length data into controller for compensation.
■ Automatic tool measurement controlled by macro programs enables automatic measurement and easy operation.

Workpiece Measurement System OP

■ Renishaw workpiece measurement system is used.
＊ OMP 60 new-generation touch probe.
＊ OMP 60 provides convenient measurement and reduces the defect ratio, lowering fixture costs and improving process control.

High-Performance Layout II

High pressure Pump Unit

■ High pressure pump unit provides abundant pressure for the coolant system to cool off the tool and carries away heat from machining.

Oil Separator System OP

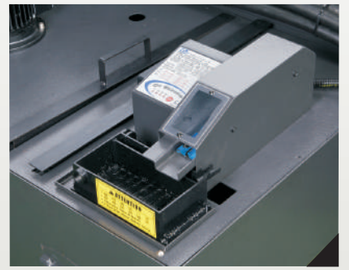

■ Disc-type oil separator is easy to install and space saving.
■ Disc-type oil separator can effectively separates the floating oil in the coolant tank, ensuring prolonged lifespan of the coolant, and therefore the high level of processing quality.

Automatic Lubrication System

■ Central oiling system provides lubrication for the drive system.
■ For the purpose of energy saving, the lubrication system will discontinue the oil feed when the drive system idles for a pre-set duration of time,

Automatic Grease Lubrication System OP

■ Use of grease lubrication can avoid mixes between coolant & lubricator.
The system prolongs the coolant lifespan.

Manual Grease Lubrication System OP

■ Grease gun is complimentary with the machine.
■ Grease inlet is distributed for X/Y/Z Axes.

Pneumatic System

■ Pressure sensor detects pressure from pneumatic system. Low pressure will be alarmed to ensure normal operation of the mechanism.

New generation Controller

The machine is equipped with advanced high speed controller, Mitsubishi M70-V series; Innovative software upgrades the machine precision, production efficiency, and process safety. A network port is also provided for achieving direct and prompt external networking.

Mitsubishi M80 Controller

■ Mitsubishi System is available

Production Management and On-line Service

Intelligent Production Management

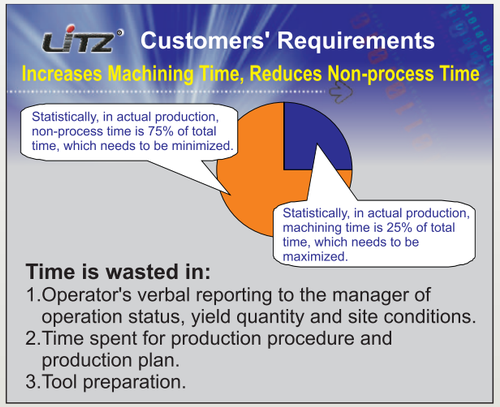

■ Production Management
■ Machine Efficiency Management
■ Real-time Alarm Management

High efficiency On-line Service

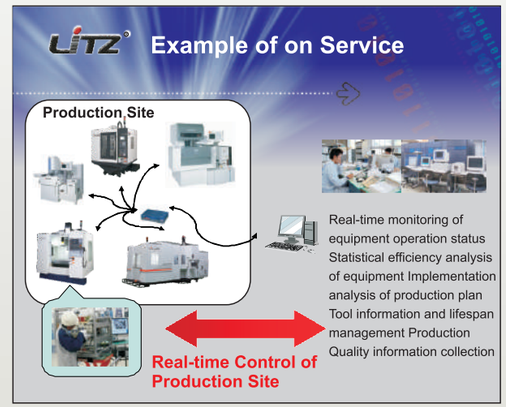

■ Real-time monitoring of machine operation
■ Real-time remote diagnosis
■ Real-time remote maintenance

Automatic Door OP

■ Programmable automatic door system (M-Code) for automatic door-open after completion of the program, this feature saves time for loading/unloading workpieces.

Safety Windows

■ Optional safety window is available for front door and side door, to prevent tool or workpiece from flying out and injuring people.
■ Safety window serves for protection but also offers transparent visibility.

Mist Clearing

Eliminates mist from the machine, providing a clean and healthy workshop environment which uplifts working efficiency and achieves energy saving and carbon reduction for a green environment.

Single Machine Layout OP

Function of Mist Collector Unit

- Extends machine lifespan–This feature reduces damage to parts caused by accumulation of oil stains in the machine and the electric control cabin.
- Reduces health risks–any form of mist or smoke pollution can be a harmful hazard to lung, throat and skin, and endanger the health.
- Reduces accidents - spreading mist causes slippery floor and increased accident occurrence rate.
- Reduces fire risks–existence and increase of mist will cause fire hazard.
- Saves production cost–mist is recovered and recycled for re-use.
- Reduces demand for higher wage - employees may request for compensation, as a result of polluted air in the work place.
- Increases working enthusiasm – employees work more actively and with passion when the polluted environment is rectified.

Multiple Machines Layout OP

- Coolant water or oil are commonly used as coolants in the modern machining process, as a result, large amount of oil mist pollutes production environment and harms employee health both physically and mentally. By equipping the high efficiency mist collector system, which is in compliance to the international occupational health/safety standard, these problems can be resolved.

Shock Absorption and Loading endurance

Shock Absorption Pad OP

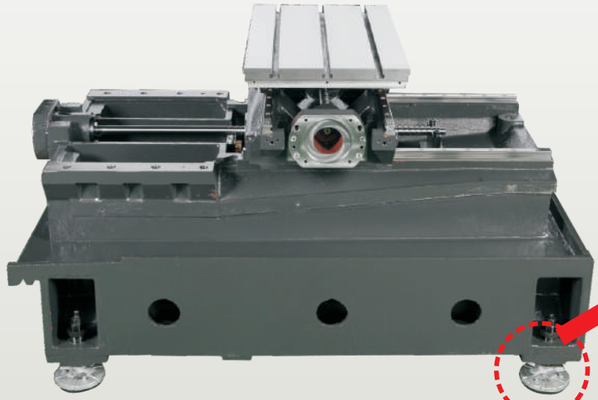

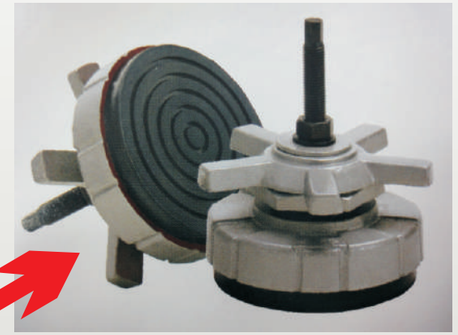

- Special design of shock absorption pad eliminates gradual machine base displacement caused by high speed and large movement machining. These pads also minimize impacts to the floor slab caused by machine operation, achieving the shock absorption effect.

Advantages of shock absorption pads

- Foundation engineering is not required when installing machine.
- Reduces noise hazard.
- Easy installation and leveling.
- Ensures machining precision; prevents slipping.
- Prevents machining vibration and improves working environment.
- Better protection against earthquake.
- Prevents building resonance and induced vibration.

High Rigidity Machine, Small Volume, Light Weight

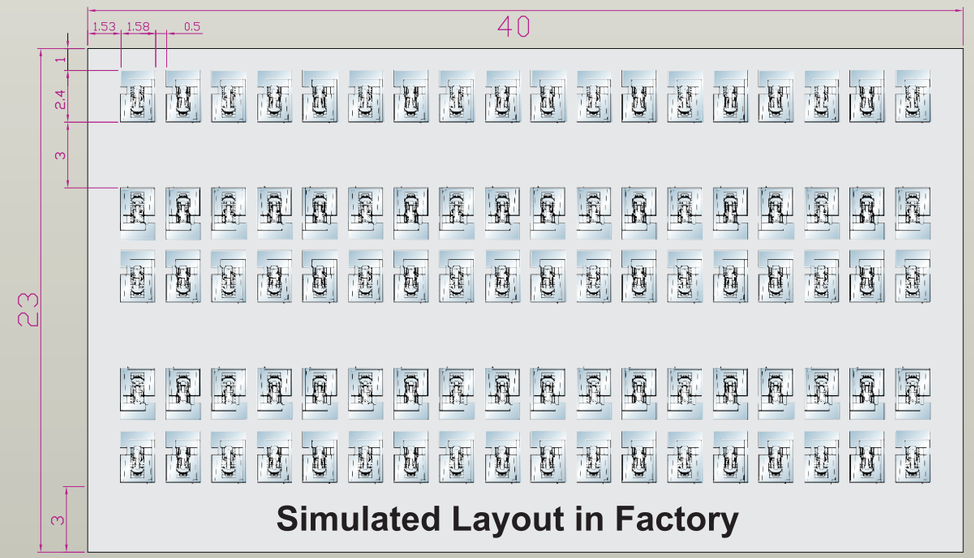

Simulated Layout in Factory

Unit:M

- Minimum volume and weight enables maximum number of machines in the limited floor area and loading capacity of the slab, optimizing utilization of plant space, as well as reducing plant investment.
- Unique design that satisfies high rigidity requirements and effectively lowers machine weight, for the plant slab to afford bearing more machines.
- Weight of TV-300: 2200kg, Weight of TV-500: 2500kg, Weight of TV-700: 3000kg.

Convenient Operation

Wide Front Door

■ Large front door opening makes loading/ unloading fixture and workpiece more convinient.

Protective Side-door & Lighting OP

■ External light is easy to enter the machine. It improves interior visibility and facilitates operation and monitoring of the machine.

Top Protection Hood OP

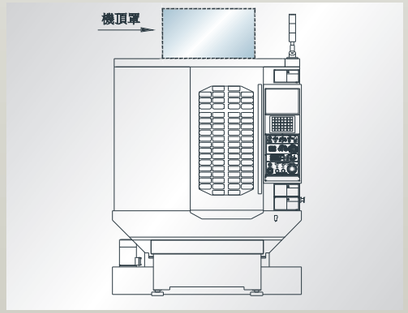

■ When oil is used as coolant, top hood in combination with mist collector system improve the air quality in the machining workshop.

Safety Switch

■ The processing program will not start unless the safety door is closed, for protecting the operator.
■ The processing program will halt if the safety door is opened during the operation.

Alarm Light (LED) and Buzzer

■ Yellow light will flash when a program completes, alerting the operator to load/unload workpiece.
■ In case of anomaly during the process, the red light will flash, indicating an emergency troubleshooting attention to be performed.

Internal Lighting (high luminance)

igh luminance working light is rovided inside the machine to cilitate workpiece loading/ nloading and measurement tasks. he working light is dust resistant, aterproof, and explosion proof. arts of working light are very ccessible in the market, for convenient nd prompt maintenance and service.

High-performance Inspection System

Roundness Inspection

Superb Machining Performances

■ **Machining Capabilities**

Model \ Material \ Machining		Drill Tool dia. mm X Spindle speed min⁻¹ X feedrate mm/min	TAPPING Tool dia. mm X pitch mm	Milling Cutting capacity cm³/min Spindle speed min⁻¹ X feedrate mm/min
TV-300 TV-500 TV-700	ADC	∅38x 1200 x 100	M27 x 3.0	600 : 8000 x 3000
	S45C	∅25 x 639 x 31	M14 x 2.0	90 : 1200 x 1000

Note: These figures are minimum in capacity.

The machining speed that exceeds your expectations

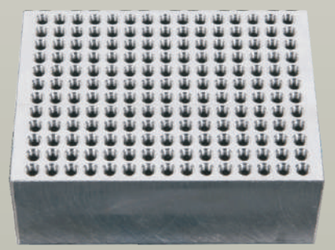

Rapid Rigid Tapping (121 holes)
Model: TV-300/500/700
Workpiece material: Aluminum (A5052)
Tapping speed: 4000rpm
Tool used: M6 x P1.0 tap
Effective tapping depth: 12mm
Tapping time per hole: 0.90s/hole (tapping)

Extensive Machining Range

Maximum Machining Range

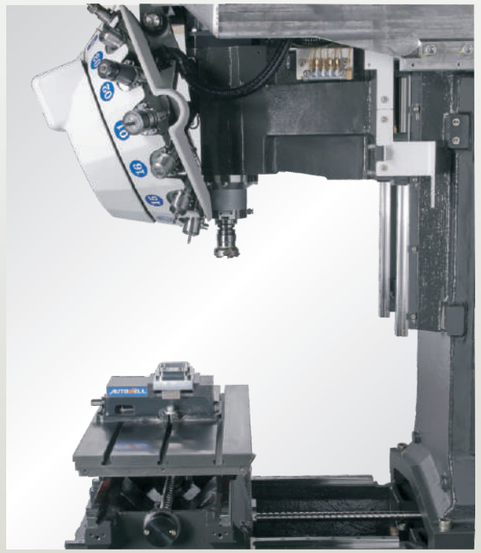

■ Extended travel in X/Y/Z axes facilitates mounting of fixtures as well as larger size workpieces.

High Space Utilization

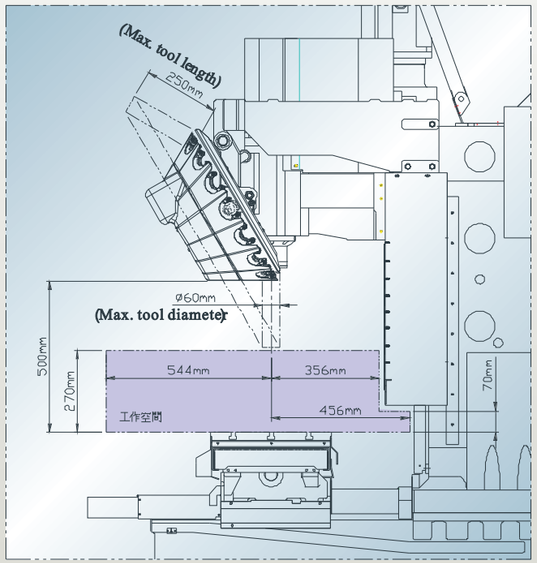

■ Large working space satisfies versatile machining requirements when a 4th axis rotary or a fixture is applied.

Minimum Floor Area Requirement

Simple design of machine bed saves floor area and enables optimal space use.

Lifted Z axis Travel OP

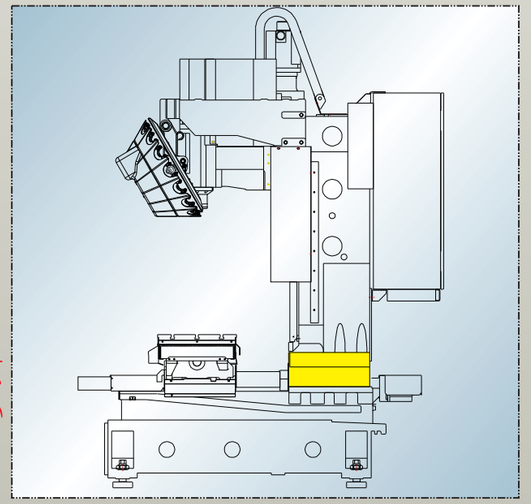

■ Raised column height (100mm-200mm) to cope with special fixture or extra large workpiece.

Automatic Pallet Changer(APC) OP

TV System + APC

■ APC worktables is optional, to reduce the non-cutting time, and increase the production efficiencies.

■ APC unit is simple, compact, and easy to install/operate.

Pallet Changer System

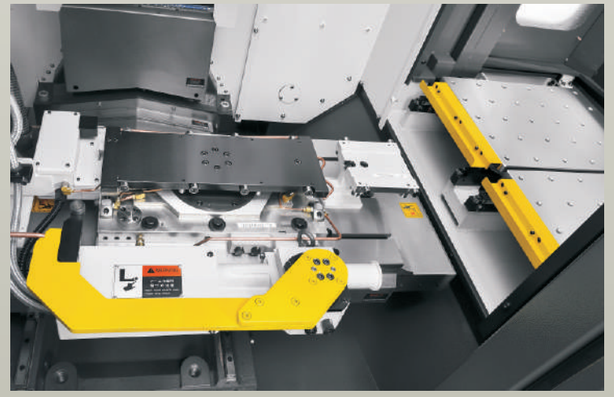

■ APC unit - Agile, stable, and high repeatability

APC

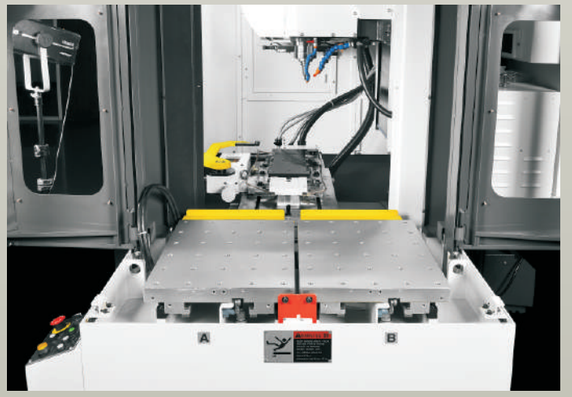

■ APC unit, changes pallets from side doors

Workpiece Transportation Options

Manual Transport

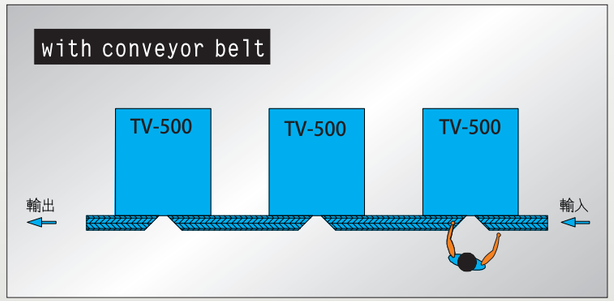

Robot (Mitsubishi)

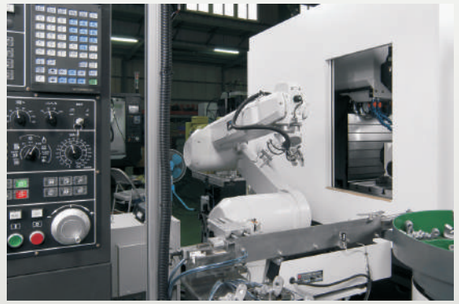

Robot / Automation Utilization

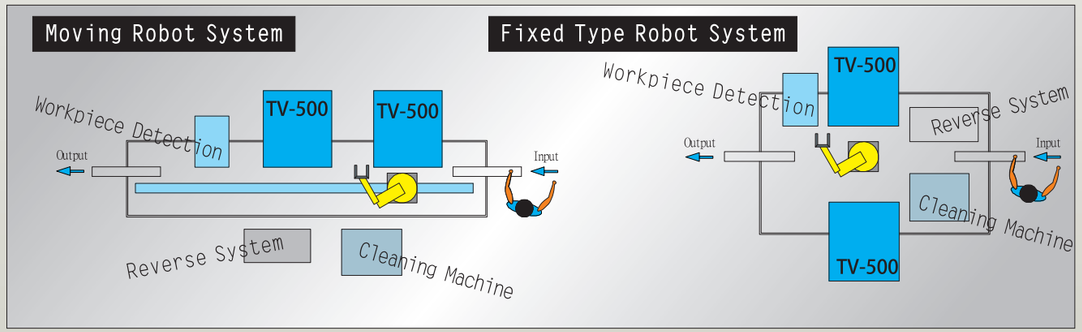

TV500 + Mitsubishi Robot + TV500

Dimensions

Unit: mm

Dimensions

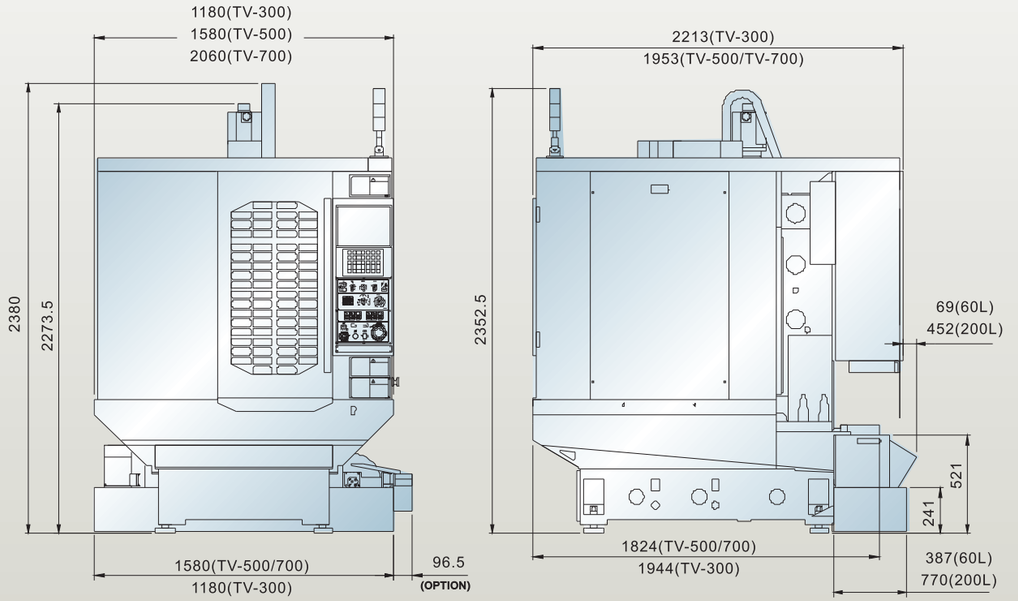

Tool Shank Dimensions

Tool Holder & Pull stud

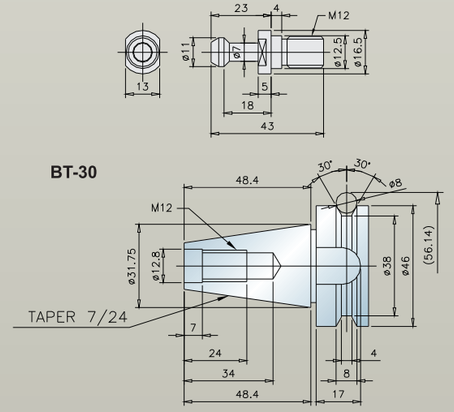

Worktable Dimensions

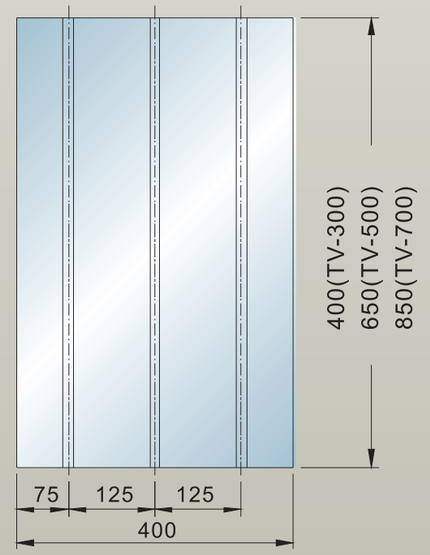

Technical Specifications

Model		TV-300	TV-500	TV-700
Travel				
X axis	mm	300	500	700
Y axis	mm	400	400	400
Z axis	mm	330	330	330
Spindle nose to table	mm	170-500	170-500	170-500
Spindle				
Max. spindle speed	rpm	12000	12000	12000
ATC System				
Number of tools	no.	16	16	16
Max. tool diameter	mm	60 / 80	60 / 80	60 / 80
Max. tool length	mm	250	250	250
Max. tool weight	kg	3	3	3
ATC type		Disc type	Disc type	Disc type
Tool shank		BT-30	BT-30	BT-30
Motor				
Spindle motor (cont./30 min.)	kw	3.7 / 5.5	3.7 / 5.5	3.7 / 5.5
X/Y/Z servo motor	kw	1.5 / 1.5 / 2.2	1.5 / 1.5 / 2.2	1.5 / 1.5 / 2.2
Table				
Table size	mm	400x400	650x400	850x400
Max. load capacity	kg	250	250	250
T-slot (No. x Width x Distance)	mm	3x14x125	3x14x125	3x14x125
Rapid speed				
X-axis	M/min	60	60	60
Y-axis	M/min	60	60	60
Z-axis	M/min	60	60	60
Cutting feed rate	mm/min	1-20000	1-20000	1-20000
Controller				
Mitsubishi		M70-V	M70-V	M70-V
Miscellaneous				
Machine weight	kg	2200	2500	3000
Power requirement	KVA	15	15	15
Coolant capacity	L	150	200	200
Air source	kg/cm^2	6	6	6

- The catalog is only for reference. The machine may differ to this specification.
- The company reserves the rights to modify or to stop adopting the specification of this catalog.

List of Accessories

● Standard accessory ○ Optional ☆Requires consultation x Not available

Spindle	TV-300	TV-500	TV-700
Spindle speed 12000RPM	●	●	●
Spindle speed 24000RPM	○	○	○
Spindle oil coolant system	○	○	○
Coolant through spindle system	○	○	○
Spindle air blow system	●	●	●
Rigid tapping	●	●	●
Controller			
Mitsubishi M70-V	●	●	●
Mitsubishi M730	○	○	○
FANUC 0iMD	○	○	○
Cooling System			
Coolant cooling system	●	●	●
Spindle programmable air blow	●	●	●
Spindle splash ring	○	○	○
Chip Removal System			
Coolant system	●	●	●
Top hood protection cover	○	○	○
Top hood washing system	○	○	○
Fixture cleaning device	○	○	○
Chip Flush - Base/Sides	○	○	○
Portable water gun	●	●	●
Portable air gun	●	●	●
Full enclosure cover	●	●	●
Telescopic cover, X/Y/Z	●	●	●
Measuring system			
Infrared tool breakage detection	○	○	○
Workpiece Measurement System	○	○	○
Tool Length Measurement System	○	○	○
Oil-coolant separator			
Disc type oil-coolant separator	○	○	○

Lubrication System	TV-300	TV-500	TV-700
Automatic lubrication system	●	●	●
Central Lubrication System	●	●	●
Manual Grease Lubrication	○	○	○
Automatic Grease Lubrication	○	○	○
ATC Tool Change			
ATC /16T	●	●	●
ATC / 21T	○	○	○
Tool shank BT-30	●	●	●
Tool shank CAT or others	○	○	○
ATC System	●	●	●
3-axis transmission system			
3-axis linear scale	○☆	○☆	○☆
Electrical			
Front door safety device	●	●	●
Working light	●	●	●
Alarm light	●	●	●
Electric cabin heat exchanger	●	●	●
Transformer	○	○	○
M30 Automatic power off	●	●	●
Miscellaneous			
DDR 4th axis (built-in type)	○	○	○
4th axis (rotating axis)	○	○	○
Tool packet	○	○	○
CE specifications	○	○	○
Automatic fire extinguisher	○	○	○
Extended column, 100mm	○	○	○
Extended column, 200mm	○	○	○
Automatic door	○	○	○
Base bolt & pad	●	●	●
Tool box	●	●	●
Oil mist collector system	○☆	○☆	○☆
Tailstock support	○☆	○☆	○☆
Shock absorption pads	○	○	○